

Choose kitchen ventilation with confidence.

Broan-NuTone™ offers a full range of kitchen ventilation solutions designed to fit your home and your lifestyle. Backed by a legacy of trusted performance, our products deliver powerful, quiet operation with innovative features and proven quality – helping you enjoy cleaner air and a more comfortable kitchen every day.

Trusted in
110 MILLION+
homes

Every product is
HVI
TESTED

6X
ENERGY STAR® Partner of the Year

Thriving for
90+ YEARS
and counting

4 How to Select a Range Hood & Key Technology

6 Under-Cabinet

24 Chimney / Island

38 Built-In / Power Packs

46 Downdraft

47 Make-Up Air Dampers

48 Ducting Installation Accessories

49 Product Specifications

Trusted by Homeowners. Preferred by Pros.

Healthy indoor air starts in the kitchen.

Broan-NuTone has ventilation solutions for every cooking style and the type of appliance beneath it. Whether it's a focal point in your kitchen, or hidden in custom cabinetry, Broan-NuTone – trusted experts in residential ventilation – provides the optimal solution.



Styles



Under-Cabinet



Chimney / Island



Built-In / Power Pack



Downdraft

Power (CFM*)

Higher CFM means more power for high-heat cooking, frying and smoke removal.

*Cubic Feet per Minute

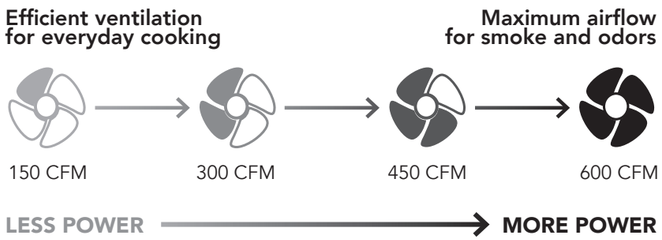

Sound (Sones*)

A lower sound level provides a more comfortable environment.

*Sones is a measurement of sound

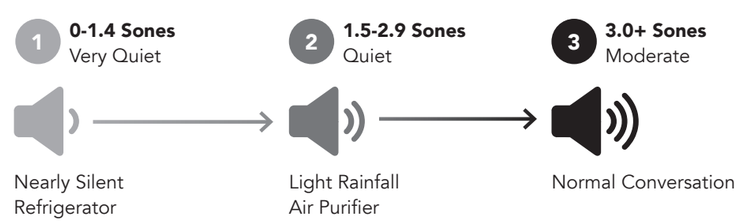

Innovative Features

AUTOMATED VENTILATION WITH SmartSense®

Smart technology automatically manages fan speed to ventilate while cooking

CCT SELECTABLE LED LIGHTING

Correlated Color Temperature (CCT) lighting adjusts your kitchen ventilation's integrated LED light between warm, soft tones and crisp daylight

CRT

Code Ready™ Technology (CRT) provides the ability to reduce airflow to address local codes or make-up air requirements

EZ1 ONE PERSON INSTALL

Easy, one-person installation

PrintGuard™

Fingerprint resistance
Easy to clean

Voice control feature allows for hands-free operation while cooking



Under-Cabinet

We have taken under-cabinet ventilation up a notch with best-in-class performance, all while preserving precious cabinet space. With our interchangeable filter designs, quiet performance and popular styles with finishes to match your appliances, Broan-NuTone has a fit for every kitchen.

For style, LED lighting, control options and more – start with the under-cabinet range hood.

ALT / Alta series



MTR / Mantra series



GLA / Glacier series



BXT series



BU2 / NU2 series



41000 / F4000 series



UNDER-CABINET

Alta Series



ALT4 Series

640 MAX Blower CFM | 0.8 Sones at first speed



AUTOMATED VENTILATION WITH SmartSense®

3-speed blower with soft touch infrared control

Bright, 2-level heat-resistant LED modules enhance your cooking experience

Dishwasher-safe, high-efficiency hybrid baffle filters

	Stainless 30"	ALT4306SS

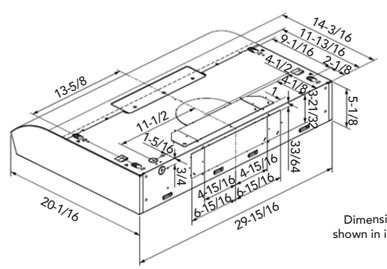

Dimensions shown in inches

SPECIFICATIONS

Width	MAX Blower CFM*	Sones†	Volts	Amps	Duct
30"	640	0.8	120	2.0	3.25x10" 3.25x14" 7" RD

OPTIONAL ACCESSORIES

Power Cord Kit	7" Round Damper	Make-Up Air Damper	ADA Adapter Kit	Replacement Filter	Ductless Charcoal Filter
HCK44**	BP87Q	MD6TU, MD8TU, MD10TU	HAWRK5	S97020204-002	HPF30

* MAX Blower CFM indicates hood blower performance in open air. Find HVI rated performance for this model in the product specifications sheet at **Broan-NuTone.com**

† Sones at normal (or working) speed.

** Available in US only

ALT3 Series

490 MAX Blower CFM | 1.1 Sones at first speed



AUTOMATED VENTILATION WITH SmartSense®

3-speed blower with soft touch infrared control

Bright, 2-level heat-resistant LED modules enhance your cooking experience

Dishwasher-safe, high-efficiency hybrid baffle filters

	Stainless 30"	ALT3304SS
	White 30"	ALT3304WW

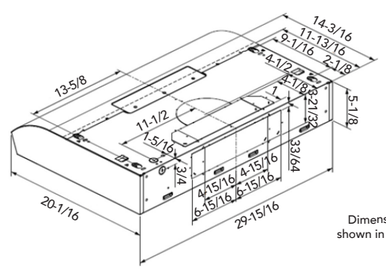

Dimensions shown in inches

SPECIFICATIONS

Width	MAX Blower CFM*	Sones†	Volts	Amps	Duct
30"	490	1.1	120	1.6	3.25x10" 7" RD

OPTIONAL ACCESSORIES

Power Cord Kit	7" Round Damper	Make-Up Air Damper	ADA Adapter Kit	Replacement Filter	Ductless Charcoal Filter
HCK44**	BP87Q	MD6TU, MD8TU, MD10TU	HAWRK5	S97020204-002	HPF30

* MAX Blower CFM indicates hood blower performance in open air. Find HVI rated performance for this model in the product specifications sheet at **Broan-NuTone.com**

† Sones at normal (or working) speed.

** Available in US only

UNDER-CABINET

Alta Series (continued)



ALT2 Series

350 MAX Blower CFM | 1.5 Sones at first speed





3-speed blower with seamless, backlit tap touch controls



Bright, 2-level heat-resistant LED modules enhance your cooking experience



Dishwasher-safe, high-efficiency micro filters



Stainless 30" — ALT2303SS



Black Stainless 30" — ALT2303BLS

SPECIFICATIONS

Width	MAX Blower CFM*	Sones†	Volts	Amps	Duct
30"	350	1.5	120	0.8	3.25x10" 7" RD

OPTIONAL ACCESSORIES

Power Cord Kit	7" Round Damper	Make-Up Air Damper	ADA Adapter Kit	Replacement Filter	Ductless Charcoal Filter
HCK44**	BP87Q	MD6TU, MD8TU, MD10TU	HAWRK5	HPFAMM30	HPF30

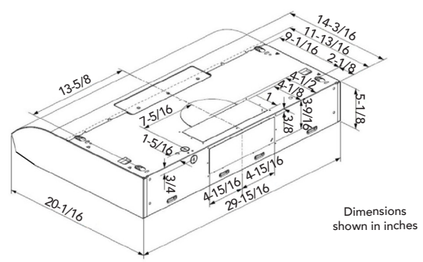

Dimensions shown in inches

ENERGY STAR | 2100 HVI CERTIFIED | TITLE 24 | ADA COMPLIANT | EZ1 ONE-PERSON INSTALLATION | ETL Intertek

* MAX Blower CFM indicates hood blower performance in open air. Find HVI rated performance for this model in the product specifications sheet at **Broan-NuTone.com**

† Sones at normal (or working) speed.

** Available in US only

ALT1 Series

350 MAX Blower CFM | 1.5 Sones at first speed





2-speed blower with hidden rocker controls



Bright, 1-level heat-resistant LED modules enhance your cooking experience



Dishwasher-safe, high-efficiency micro filters

Stainless 30" — ALT1303SS

White 30" — ALT1303WW

SPECIFICATIONS

Width	MAX Blower CFM*	Sones†	Volts	Amps	Duct
30"	350	1.5	120	0.8	3.25x10" 7" RD

OPTIONAL ACCESSORIES

Power Cord Kit	7" Round Damper	Make-Up Air Damper	ADA Adapter Kit	Replacement Filter	Ductless Charcoal Filter
HCK44**	BP87Q	MD6TU, MD8TU, MD10TU	HAWSK3	HPFAMM30	HPF30

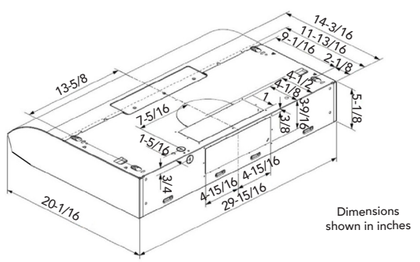

Dimensions shown in inches

ENERGY STAR | 2100 HVI CERTIFIED | TITLE 24 | ADA COMPLIANT | EZ1 ONE-PERSON INSTALLATION | ETL Intertek

* MAX Blower CFM indicates hood blower performance in open air. Find HVI rated performance for this model in the product specifications sheet at **Broan-NuTone.com**

† Sones at normal (or working) speed.

** Available in US only

UNDER-CABINET

Mantra Series



MTR3 Series

490 MAX Blower CFM | 1.1 Sones at first speed



AUTOMATED VENTILATION WITH SmartSense®

3-speed blower with soft touch infrared control

Bright, 2-level LED modules enhance your cooking experience

Dishwasher-safe, high-efficiency hybrid baffle filters

	Stainless 30"	MTR3304SS

SPECIFICATIONS

Width	MAX Blower CFM*	Sones†	Volts	Amps	Duct
30"	490	1.1	120	1.6	3.25x10" 7" RD

OPTIONAL ACCESSORIES

Power Cord Kit	7" Round Damper	Make-Up Air Damper	ADA Adapter Kit	Replacement Filter	Ductless Charcoal Filter
HCK44**	BP87Q	MD6TU, MD8TU, MD10TU	HAWRK5	S97020204-002	HPF30

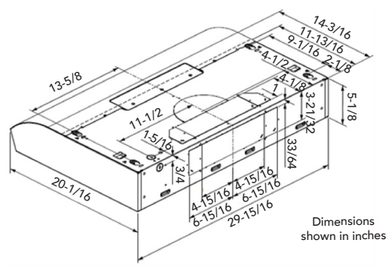

Dimensions shown in inches

* MAX Blower CFM indicates hood blower performance in open air. Find HVI rated performance for this model in the product specifications sheet at **Broan-NuTone.com**

† Sones at normal (or working) speed.

** Available in US only

MTR2 Series

350 MAX Blower CFM | 1.5 Sones at first speed



3-speed blower with seamless, backlit tap touch controls

Bright, 2-level heat-resistant LED modules enhance your cooking experience

Dishwasher-safe, high-efficiency micro filters

	Stainless 30" • 36"	MTR2303SS MTR2363SS
	White 30"	MTR2303WW

SPECIFICATIONS

Width	MAX Blower CFM*	Sones†	Volts	Amps	Duct
30" 36"	350	1.5	120	0.8	3.25x10" 7" RD

OPTIONAL ACCESSORIES

Power Cord Kit	7" Round Damper	Make-Up Air Damper	ADA Adapter Kit	Replacement Filter	Ductless Charcoal Filter
HCK44**	BP87Q	MD6TU, MD8TU, MD10TU	HAWRK5	HPFAMM30 (30") S99010434-003 (36")	HPF30 (30") S97020467 (36")

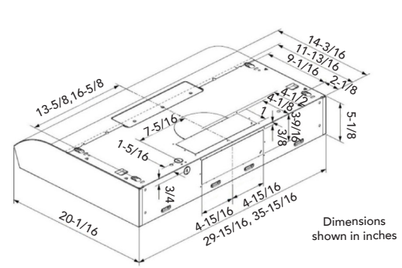

Dimensions shown in inches

* MAX Blower CFM indicates hood blower performance in open air. Find HVI rated performance for this model in the product specifications sheet at **Broan-NuTone.com**

† Sones at normal (or working) speed.

** Available in US only

Mantra Series (continued)

MTR1 Series

350 MAX Blower CFM | 1.5 Sones at first speed





2-speed blower with hidden rocker controls



Bright, 1-level heat-resistant LED modules enhance your cooking experience



Dishwasher-safe, high-efficiency micro filters



Stainless
30" • 36"
MTR1303SS
MTR1363SS



Black
30"
MTR1303BL



Black Stainless
30"
MTR1303BLS



White
30"
MTR1303WW

SPECIFICATIONS

Width	MAX Blower CFM*	Sones†	Volts	Amps	Duct
30" 36"	350	1.5	120	0.8	3.25x10" 7" RD

OPTIONAL ACCESSORIES

Power Cord Kit	7" Round Damper	Make-Up Air Damper	ADA Adapter Kit	Replacement Filter	Ductless Charcoal Filter
HCK44**	BP87Q	MD6TU, MD8TU, MD10TU	HAWSK3	HPFAMM30 (30") S99010434-003 (36")	HPF30 (30") S97020467 (36")

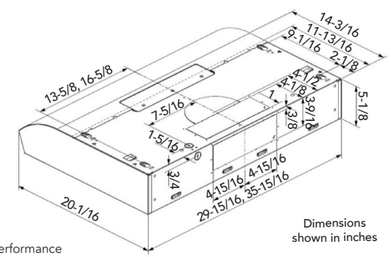

Dimensions shown in inches

* MAX Blower CFM indicates hood blower performance in open air. Find HVI rated performance for this model in the product specifications sheet at **Broan-NuTone.com**

† Sones at normal (or working) speed.

** Available in US only

Glacier Series

GLA3 Series

490 MAX Blower CFM | 1.1 Sones at first speed



AUTOMATED VENTILATION WITH SmartSense®



3-speed blower with soft touch infrared control



Bright 2-level heat-resistant LED modules enhance your cooking experience



Dishwasher-safe, high-efficiency hybrid baffle filters



Stainless
30" • 36"
GLA3304SS
GLA3364SS



White
30"
GLA3304WW

SPECIFICATIONS

Width	MAX Blower CFM*	Sones†	Volts	Amps	Duct
30" 36"	490	1.1	120	1.6	3.25x10" 7" RD

OPTIONAL ACCESSORIES

Power Cord Kit	7" Round Damper	Make-Up Air Damper	ADA Adapter Kit	Replacement Filter	Ductless Charcoal Filter
HCK44**	BP87Q	MD6TU, MD8TU, MD10TU	HAWRK5	S97020204-002 (30") S97020204-003 (36")	HPF30 (30") HPF36 (36")

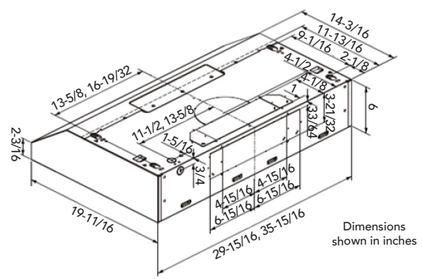

Dimensions shown in inches

* MAX Blower CFM indicates hood blower performance in open air. Find HVI rated performance for this model in the product specifications sheet at **Broan-NuTone.com**

† Sones at normal (or working) speed.

** Available in US only

UNDER-CABINET

Glacier Series (continued)



GLA2 Series

350 MAX Blower CFM | 1.5 Sones at first speed





3-speed blower with seamless, backlit tap touch controls



Bright 2-level heat-resistant LED modules enhance your cooking experience



Dishwasher-safe, high-efficiency micro filters



Stainless
30" • 36"
GLA2303SS
GLA2363SS



White
30"
GLA2303WW



Black Stainless
30" • 36"
GLA2303BLS
GLA2363BLS

SPECIFICATIONS

Width	MAX Blower CFM*	Sones†	Volts	Amps	Duct
30" 36"	350	1.5	120	0.8	3.25x10" 7" RD

OPTIONAL ACCESSORIES

Power Cord Kit	7" Round Damper	Make-Up Air Damper	ADA Adapter Kit	Replacement Filter	Ductless Charcoal Filter
HCK44**	BP87Q	MD6TU, MD8TU, MD10TU	HAWRK5	HPFAMM30 (30") S99010434-003 (36")	HPF30 (30") S97020467 (36")

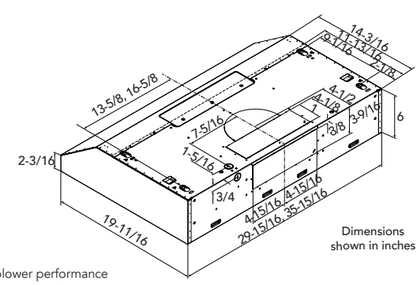

Dimensions shown in inches

* MAX Blower CFM indicates hood blower performance in open air. Find HVI rated performance for this model in the product specifications sheet at **Broan-NuTone.com**

† Sones at normal (or working) speed.

** Available in US only

GLA1 Series

350 MAX Blower CFM | 1.5 Sones at first speed





2-speed blower with hidden rocker controls



Bright, 1-level heat-resistant LED modules enhance your cooking experience



Dishwasher-safe, high-efficiency micro filters



Stainless 24" • 30" • 36" • 42"
GLA1243SS • GLA1303SS
GLA1363SS • GLA1423SS



Black 30" • 36" • 42"
GLA1303BL • GLA1363BL
GLA1423BL



White 24" • 30" • 36" • 42"
GLA1243WW • GLA1303WW
GLA1363WW • GLA1423WW

SPECIFICATIONS

Width	MAX Blower CFM*	Sones†	Volts	Amps	Duct
24" 30" 36" 42"	350	1.5	120	0.8	3.25x10" 7" RD

OPTIONAL ACCESSORIES

Power Cord Kit	7" Round Damper	Make-Up Air Damper	ADA Adapter Kit	Replacement Filter	Ductless Charcoal Filter
HCK44**	BP87Q	MD6TU, MD8TU, MD10TU	HAWSK3	S99010434-001 (24") HPFAMM30 (30") S99010434-003 (36") S99010434-004 (42")	S97020465 (24") HPF30 (30") S97020467 (36") S97020468 (42")

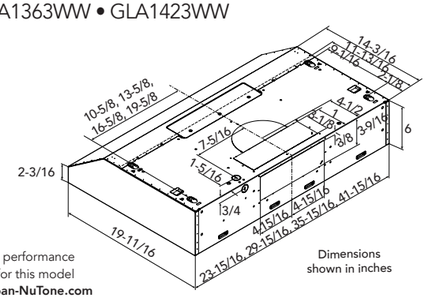

Dimensions shown in inches

* MAX Blower CFM indicates hood blower performance in open air. Find HVI rated performance for this model in the product specifications sheet at **Broan-NuTone.com**

† Sones at normal (or working) speed.

** Available in US only

UNDER-CABINET

BXT Series

BXT1 Series

270 MAX Blower CFM | 2.0 Sones at first speed





2-speed blower with hidden rocker controls



Bright, 1-level LED bulb illuminates the cooking surface

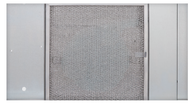

Dishwasher-safe, aluminum mesh filter providers highly efficient grease removal

Stainless 30"	BXT130SS** BXT130SSC***
Black 30"	BXT130BL** BXT130BLC***
White 30"	BXT130WW** BXT130WWC***

SPECIFICATIONS

Width	MAX Blower CFM*	Sones†	Volts	Amps	Duct
30"	270	2.0	120	1.3	3.25x10" 7" RD

OPTIONAL ACCESSORIES

Power Cord Kit	7" Round Damper	Round Duct Transition	ADA Adapter Kit	Replacement Filter	Ductless Charcoal Filter
HCK44**	BP87Q	411	HAWSK3	S99010467	HPFX1

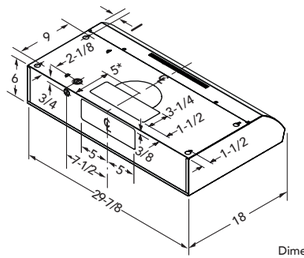

Dimensions shown in inches

* MAX Blower CFM indicates hood blower performance in open air. Find HVI rated performance for this model in the product specifications sheet at **Broan-NuTone.com**

† Sones at normal (or working) speed.

** Available in US only *** Available in Canada only

UNDER-CABINET

F40000 Series

F40000 Series**

230 MAX Blower CFM | 3.5 Sones at first speed



PrintGuard

Available on Stainless Finish Models



2-speed blower with easy-to-use rocker controls



Bright, 1-level LED bulb illuminates the cooking surface (bulb not included)



Removable, reusable, dishwasher-safe, aluminum mesh filter for easy cleaning and maintenance

Stainless Finish 24" • 30" • 36"	F4024SF F4030SF F4036SF
Black 24" • 30" • 36"	F402423 F403023 F403623
White 24" • 30" • 36"	F402411 F403011 F403611

SPECIFICATIONS

Width	MAX Blower CFM*	Sones†	Volts	Amps	Duct
24" 30" 36"	230	3.5	120	2.5	3.25x10" 7" RD

OPTIONAL ACCESSORIES

Power Cord Kit	7" Round Damper	7" Round Adapter Plate	Round Duct Transition	ADA Adapter Kit	Replacement Filter	Ductless Charcoal Filter
HCK44**	BP87Q	SR680508	411	HAWSK3	BP29	41F

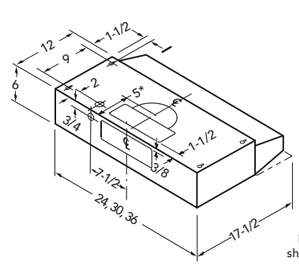

Dimensions shown in inches

* MAX Blower CFM indicates hood blower performance in open air. Find HVI rated performance for this model in the product specifications sheet at **Broan-NuTone.com**

† Sones at normal (or working) speed.

** Available in US only

UNDER-CABINET

BU2 Series

BU2 Series*** | 230 MAX Blower CFM | 3.5 Sones at first speed



PrintGuard
Available on Stainless Finish Models



2-speed blower with easy-to-use rocker controls



Bright, 1-level LED bulb illuminates the cooking surface
(bulb not included)



Replaceable, standard aluminum filter for easy maintenance



Stainless Finish
24" • 30"
BU224SF
BU230SF



Black
30"
BU230BL



White
30"
BU230WW



White w/ Black Trim
24" • 30"
BU224WH
BU230WH

SPECIFICATIONS

Width	MAX Blower CFM*	Sones†	Volts	Amps	Duct
24" 30"	230	3.5	120	2.5	3.25x10" 7" RD

OPTIONAL ACCESSORIES

Power Cord Kit	7" Round Damper	7" Round Adapter Plate	Round Duct Transition	ADA Adapter Kit	Replacement Filter	Ductless Charcoal Filter
HCK44**	BP87Q	SR680508	411	HAWSK	BP29	41F

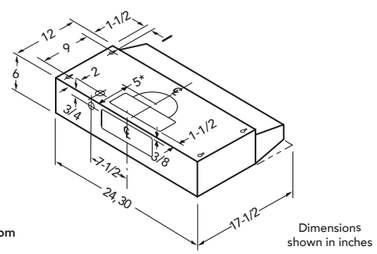

Dimensions shown in inches

* MAX Blower CFM indicates hood blower performance in open air. Find HVI rated performance for this model in the product specifications sheet at **Broan-NuTone.com**

† Sones at normal (or working) speed.

** Available in US only *** Available in Canada only

UNDER-CABINET

NU2 Series

NU2 Series*** | 230 MAX Blower CFM | 3.5 Sones at first speed



PrintGuard
Available on Stainless Finish Models



2-speed blower with easy-to-use rocker controls



Bright, 1-level LED bulb illuminates the cooking surface
(bulb not included)



Replaceable, standard aluminum filter for easy maintenance



Stainless Finish
30"
NU230SF



Black
30"
NU230BL



White
24" • 30"
NU224WW
NU230WW

SPECIFICATIONS

Width	MAX Blower CFM*	Sones†	Volts	Amps	Duct
24" 30"	230	3.5	120	2.5	3.25x10" 7" RD

OPTIONAL ACCESSORIES

Power Cord Kit	7" Round Damper	7" Round Adapter Plate	Round Duct Transition	ADA Adapter Kit	Replacement Filter	Ductless Charcoal Filter
HCK44**	BP87Q	SR680508	411	HAWSK3	BP29	41F

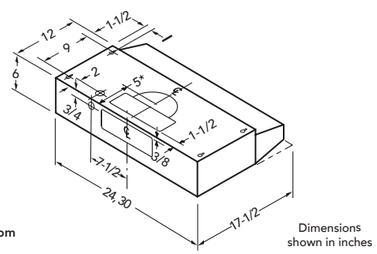

Dimensions shown in inches

* MAX Blower CFM indicates hood blower performance in open air. Find HVI rated performance for this model in the product specifications sheet at **Broan-NuTone.com**

† Sones at normal (or working) speed.

** Available in US only *** Available in Canada only

UNDER-CABINET

41000 Series

41000 Series**



PrintGuard

Available on Stainless Finish Models



2-speed blower with easy-to-use rocker controls



Bright, 1-level LED bulb illuminates the cooking surface
(bulb not included)



Replaceable charcoal filter for easy maintenance

	Stainless Finish 24" • 30" • 36"	4124SF 4130SF 4136SF
	Black 30"	413023
	White 21" • 24"	412101 412401

SPECIFICATIONS

Width	Volts	Amps	Duct	Convertible
21" 24" 30" 36"	120	0.8	Ductless Only	No

OPTIONAL ACCESSORIES

Power Cord Kit	ADA Adapter Kit	Replacement Filter
HCK44**	HAWSK3	41F

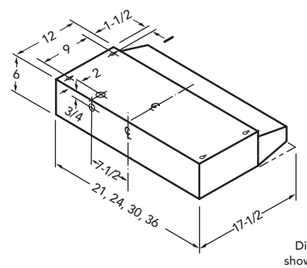

Dimensions shown in inches

** Available in US only



Chimney / Island

When a kitchen is designed to make the range hood the center of attention, the chimney hood is the perfect choice, while graceful curves and a low-profile design help island hoods blend seamlessly into any décor.

Elegant symmetry, strong angles, gentle curves, glass accents, striking lighting. Details make all the difference, and that says something about you.



Pyramid



Slim Pyramid



T-style



Curved Glass

CHIMNEY

WPR3 Series

WPR3 Series | 300 MAX Blower CFM | 1.0 Sone at first speed





CCT
SELECTABLE LED LIGHTING



2-speed blower with hidden rocker controls



2-level CCT selectable LED lighting modules

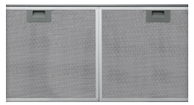

Dishwasher-safe, high-efficiency micro filters feature quick-release latch for easy removal



Stainless
30" • 36"

WPR302CSSE
WPR362CSSE

SPECIFICATIONS

Width	MAX Blower CFM*	Sones†	Volts	Amps	Duct
30" 36"	300	1.0	120	1.8	6" RD

OPTIONAL ACCESSORIES

10' Flue Extension	Non-Duct Recirculation Kit	Non-Duct Recirculation Filters	ADA Adapter Kit	Replacement Filter	Ductless Charcoal Filter
FXN58SS	WPRRCK	WPRCF	HAWSK3	S1119571 (30") S1119572 (36")	WPRCF

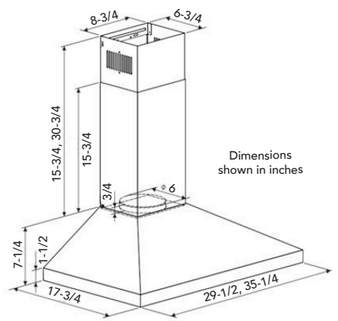

* MAX Blower CFM indicates hood blower performance in open air. Find HVI rated performance for this model in the product specifications sheet at **Broan-NuTone.com**

† Sones at normal (or working) speed.

CHIMNEY

BW50 Series

BW5030SSL** | 380 MAX Blower CFM | 1.5 Sones at first speed





3-speed blower with push button control for easy operation



Bright, 1-level LED modules enhance your cooking experience



Dishwasher-safe aluminum filters feature quick-release latch for easy removal and professional style



Stainless
30"

BW5030SSL

SPECIFICATIONS

Width	MAX Blower CFM*	Sones†	Volts	Amps	Duct	Convertible
30"	380	1.5	120	2.6	6" RD	No

OPTIONAL ACCESSORIES

10' Flue Extension	Non-Duct Kit	Replacement Filter	Ductless Charcoal Filter
FXN58SS	RK58	S97018027	ROUNDFILTER

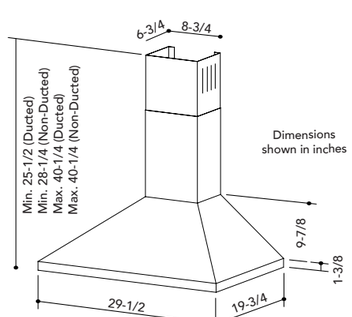

* MAX Blower CFM indicates hood blower performance in open air. Find HVI rated performance for this model in the product specifications sheet at **Broan-NuTone.com**

† Sones at normal (or working) speed.

** Available in US only

BW1 Series (continued)



BWP1 Series

450 MAX Blower CFM | 3.0 Sones at first speed





3-speed blower with backlit soft touch buttons for precise control



Bright, 1-level LED lighting illuminates the cooktop and enhances the cooking experience



Dishwasher-safe micro filters feature quick-release latch for easy removal



Stainless
24" • 30" • 36"

BWP1244SS
BWP1304SS
BWP1364SS

SPECIFICATIONS

Width	MAX Blower CFM*	Sones†	Volts	Amps	Duct
24" 30" 36"	450	3.0	120	2.6	6" RD

OPTIONAL ACCESSORIES

10' Flue Extension	Non-Duct Kit	Airflow Reducer (<300 CFM)	Replacement Filter	Ductless Charcoal Filter
FXN58SS	ARKBWP	ARP6	S99010489 (24") S97018027 (30") S97018028 (36")	FILTERBWPTS

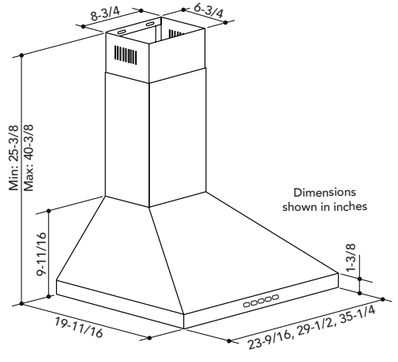

* MAX Blower CFM indicates hood blower performance in open air. Find HVI rated performance for this model in the product specifications sheet at **Broan-NuTone.com**

† Sones at normal (or working) speed.

BWS1 Series

450 MAX Blower CFM | 3.0 Sones at first speed





3-speed blower with backlit soft touch buttons for precise control



Bright, 1-level LED lighting illuminates the cooktop and enhances the cooking experience



Dishwasher-safe micro filters feature quick-release latch for easy removal



Stainless
30"

BWS1304SS



Black Stainless
30"

BWS1304BLS

SPECIFICATIONS

Width	MAX Blower CFM*	Sones†	Volts	Amps	Duct
30"	450	3.0	120	2.6	6" RD

OPTIONAL ACCESSORIES

10' Flue Extension	Non-Duct Kit	Airflow Reducer (<300 CFM)	Replacement Filter	Ductless Charcoal Filter
AEBWS (stainless) AEBWSBLS (black stainless)	ARKBWS	ARP6	S97018027	FILTERBWPTS

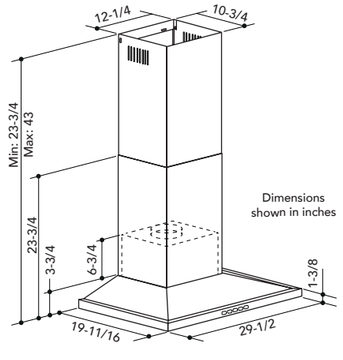

* MAX Blower CFM indicates hood blower performance in open air. Find HVI rated performance for this model in the product specifications sheet at **Broan-NuTone.com**

† Sones at normal (or working) speed.

CHIMNEY

BW1 Series

BWT1 Series

450 MAX Blower CFM | 3.0 Sones at first speed





3-speed blower with backlit soft touch buttons for precise control



Bright, 1-level LED lighting illuminates the cooktop and enhances the cooking experience

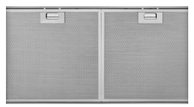

Dishwasher-safe micro filters feature quick-release latch for easy removal

	**Stainless** 30"	BWT1304SS
	**Stainless w/ Black Glass** 30"	BWT1304SSB

SPECIFICATIONS

Width	MAX Blower CFM*	Sones†	Volts	Amps	Duct
30"	450	3.0	120	2.6	6" RD

OPTIONAL ACCESSORIES

10' Flue Extension	Non-Duct Kit	Airflow Reducer (<300 CFM)	Replacement Filter	Ductless Charcoal Filter
FXN53SS	ARKBWT	ARP6	S97018027	FILTERBWPTS

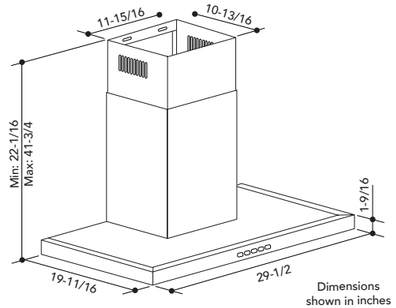

* MAX Blower CFM indicates hood blower performance in open air. Find HVI rated performance for this model in the product specifications sheet at **Broan-NuTone.com**

† Sones at normal (or working) speed.

CHIMNEY

EW4 Series

EW43 Series

460 MAX Blower CFM | 1.5 Sones at first speed





3-speed blower with tap-touch capacitive control for a smooth, easy-to-clean surface



Bright, 2-level LED lighting illuminates the cooktop and enhances the cooking experience



Dishwasher-safe deluxe filters feature quick-release latch for easy removal

	**Stainless** 30" • 36"	EW4330SS EW4336SS

SPECIFICATIONS

Width	MAX Blower CFM*	Sones†	Volts	Amps	Duct
30" 36"	460	1.5	120	1.6	6" RD

OPTIONAL ACCESSORIES

10' Flue Extension	Non-Duct Kit	Replacement Filter	Ductless Charcoal Filter
AEEW43SS	ARKEW43	S99010476 (30") S99010477 (36")	S99010473 (30") S99010474 (36")

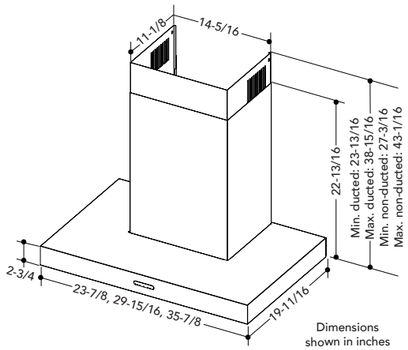

* MAX Blower CFM indicates hood blower performance in open air. Find HVI rated performance for this model in the product specifications sheet at **Broan-NuTone.com**

† Sones at normal (or working) speed.

EW4 Series (continued)



EW48 Series

460 MAX Blower CFM | 1.5 Sones at first speed





3-speed blower with tap-touch capacitive control for a smooth, easy-to-clean surface

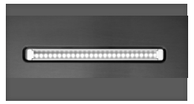

Bright, 2-level LED modules provide ample cooktop lighting



Dishwasher-safe deluxe filters feature quick-release latch for easy removal



Stainless
30" • 36"
EW4830SS
EW4836SS



Black Stainless
30"
EW4830BLS

SPECIFICATIONS

Width	MAX Blower CFM*	Sones†	Volts	Amps	Duct
30" 36"	460	1.5	120	1.6	6" RD

OPTIONAL ACCESSORIES

9' - 10' Flue Extension	Non-Duct Kit	Replacement Filter	Ductless Charcoal Filter
AEEW48SS	ARKEW48	S99010476 (30") S99010477 (36")	S99010473 (30") S99010474 (36")

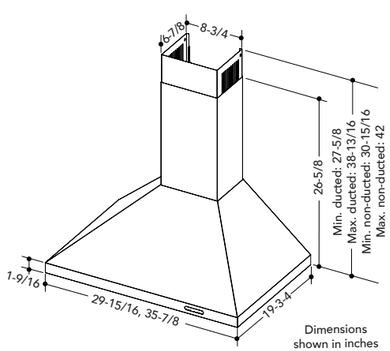

* MAX Blower CFM indicates hood blower performance in open air. Find HVI rated performance for this model in the product specifications sheet at **Broan-NuTone.com**

† Sones at normal (or working) speed.

EW46 Series

460 MAX Blower CFM | 1.5 Sones at first speed





3-speed blower with tap-touch capacitive control for a smooth, easy-to-clean surface



Bright, 2-level LED modules provide ample cooktop lighting

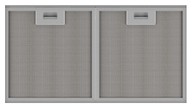

Dishwasher-safe deluxe filters feature quick-release latch for easy removal



Stainless
30"
EW4630SS

SPECIFICATIONS

Width	MAX Blower CFM*	Sones†	Volts	Amps	Duct
30"	460	1.5	120	1.6	6" RD

OPTIONAL ACCESSORIES

10' Flue Extension	Non-Duct Kit	Replacement Filter	Ductless Charcoal Filter
AEEW46SS	ARKEW46	S99010478	S99010475

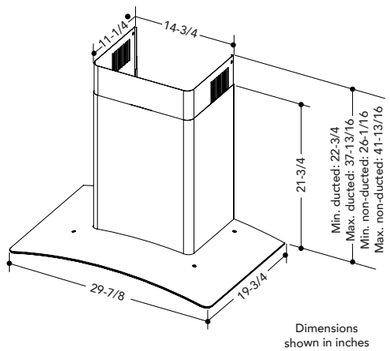

* MAX Blower CFM indicates hood blower performance in open air. Find HVI rated performance for this model in the product specifications sheet at **Broan-NuTone.com**

† Sones at normal (or working) speed.

CHIMNEY

EW Series



EWP1 Series** | 640 MAX Blower CFM | <0.3 Sones at first speed





4-speed blower with tap-touch capacitive control for a smooth, easy-to-clean surface



Bright, 2-level LED modules provide ample cooktop lighting



Dishwasher-safe hybrid baffle filters offer superior grease capture



Stainless
30" • 36"

EWP1306SS
EWP1366SS

SPECIFICATIONS

Width	MAX Blower CFM*	Sones†	Volts	Amps	Duct
30" 36"	640	<0.3	120	3.7	6" RD

OPTIONAL ACCESSORIES

10' Flue Extension	Non-Duct Kit	Replacement Filter	Ductless Charcoal Filter
FXN58SS	ARKBWP	S97010487 (30") S97010488 (36")	S99010494

Install the hood so that the bottom of the unit is 26" to 36" above the cooking surface. Mounting height may be affected by ceiling height.

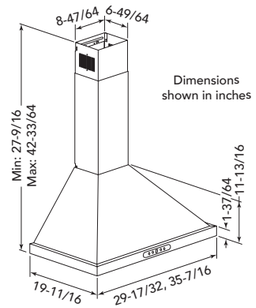

CODE READY TECHNOLOGY · 2100 HVI CERTIFIED · TITLE 24 · Intertek

* MAX Blower CFM indicates hood blower performance in open air. Find HVI rated performance for this model in the product specifications sheet at **Broan-NuTone.com**

† Sones at normal (or working) speed.

** Available in US only

EWS1 Series | 650 MAX Blower CFM | 1.4 Sones at first speed





2-speed blower with easy-to-use rocker controls



Bright, 2-level heat resistant LED lighting illuminates the cooktop and enhances the cooking experience



High-efficiency micro filters trap grease and cooking pollutants



Stainless
30" • 36"

EWS1306SS
EWS1366SS

SPECIFICATIONS

Width	MAX Blower CFM*	Sones†	Volts	Amps	Duct
30" 36"	650	1.4	120	3.4	6" RD

OPTIONAL ACCESSORIES

9-11' Flue Extension	Non-Duct Kit	Make-Up Air Damper	ADA Adapter Kit	Replacement Filter	Ductless Charcoal Filter
AEWCST1SS	ANKWCPST1	MD6TU, MD8TU, MD10TU	HAWSK3	S113821	SV22759

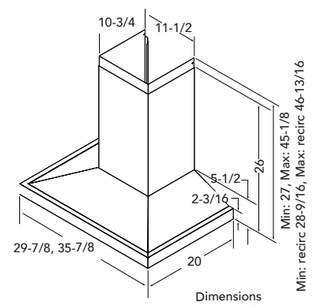

CODE READY TECHNOLOGY · 2100 HVI CERTIFIED · ADA COMPLIANT · UL CERTIFIED

* MAX Blower CFM indicates hood blower performance in open air. Find HVI rated performance for this model in the product specifications sheet at **Broan-NuTone.com**

† Sones at normal (or working) speed.

ISLAND

EIT1 Series

EIT1366SS

640 MAX Blower CFM

<0.3 Sones at first speed





4-speed blower with tap-touch capacitive control for a smooth, easy-to-clean surface



Bright, 2-level LED modules provide ample cooktop lighting



Dishwasher-safe baffle filters offer superior grease capture

Stainless
36"

EIT1366SS

SPECIFICATIONS

Width	MAX Blower CFM*	Sones†	Volts	Amps	Duct
36"	640	<0.3	120	3.7	6" RD

OPTIONAL ACCESSORIES

10' Flue Extension	Non-Duct Kit	Remote Control	Replacement Filter	Ductless Charcoal Filter
FXNEIT1SS	ANKIBF4	HCR4	S1108684	S99527023

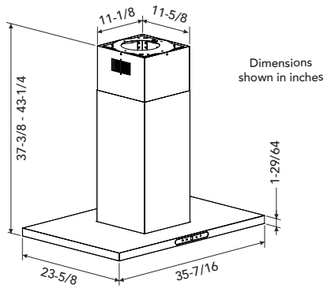

Dimensions shown in inches

* MAX Blower CFM indicates hood blower performance in open air. Find HVI rated performance for this model in the product specifications sheet at **Broan-NuTone.com**

† Sones at normal (or working) speed.



Built-In/ Power Packs

Built-in/power packs are a hidden ventilation solution for the kitchen, designed to integrate seamlessly into custom cabinetry and unique kitchen designs. It's a simple, behind-the-scenes option that eliminates smoke and odors without ever being noticed.

You have a vision. Broan will help you see it through.

Custom range hood inserts







Built-in inserts

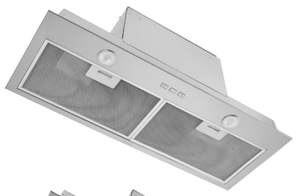

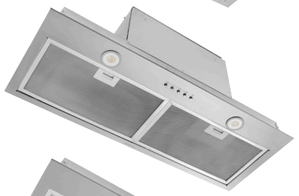



BUILT-IN / POWER PACKS

PM Series



PM600 Series

650 MAX Blower CFM | 0.5 Sones at first speed



AUTOMATED VENTILATION WITH SmartSense®

Voice control



4-speed blower with backlit soft touch buttons for precise control



Bright, 2-level heat-resistant LED modules enhance your cooking experience



Dishwasher-safe hybrid baffle filter offers superior grease capture

Stainless 21"

PM600SSV**

SPECIFICATIONS

Width	MAX Blower CFM*	Sones†	Volts	Amps	Duct
21"	650	0.5	120	4.0	3.25x10" 6" RD, 8" RD

OPTIONAL ACCESSORIES

Power Cord Kit	Non-Duct Kit	Stainless Steel Liners	Make-Up Air Damper	ADA Adapter Kit	Replacement Filter	Ductless Charcoal Filter
HCK44**	HARKPM21	LB30SS LB36SS	MD6TU, MD8TU, MD10TU	HAWRK5	HPFBN1	S99010464

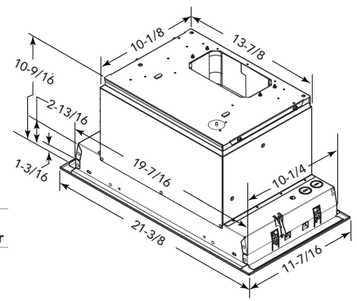

Dimensions shown in inches

* MAX Blower CFM indicates hood blower performance in open air. Find HVI rated performance for this model in the product specifications sheet at **Broan-NuTone.com**

† Sones at normal (or working) speed.

** Available in US only

PM400 Series

450 MAX Blower CFM | 1.0 Sone at first speed



Voice control ^



3-speed blower with backlit soft touch controls ^



3-speed blower with rotary controls #



Bright, 2-level heat-resistant LED modules enhance your cooking experience

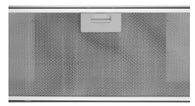

Dishwasher-safe aluminum mesh filter features quick-release latch for easy removal

Stainless 21"

PM400SSV**
PM400SS

SPECIFICATIONS

Width	MAX Blower CFM*	Sones†	Volts	Amps	Duct
21"	450	1.0	120	2.3	3.25x10" 6" RD

OPTIONAL ACCESSORIES

Power Cord Kit	Non-Duct Kit	Stainless Steel Liners	Make-Up Air Damper	Hybrid Baffle Filters	ADA Adapter Kit ^	Replacement Filter	Ductless Charcoal Filter
HCK44**	HARKPM21	LB30SS LB36SS	MD6TU, MD8TU, MD10TU	HPFBN1	HAWRK5	S99010400	S99010464

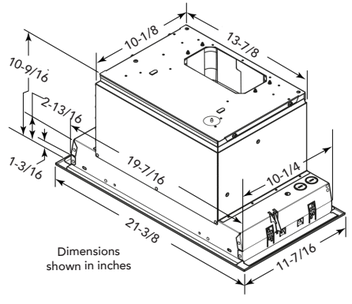

Dimensions shown in inches

* MAX Blower CFM indicates hood blower performance in open air. Find HVI rated performance for this model in the product specifications sheet at **Broan-NuTone.com**

† Sones at normal (or working) speed.

** Available in US only ^ PM400SV model only # PM400SS model only

PM Series (continued)

PM300 Series

300 MAX Blower CFM | 3.0 Sones at first speed





2-speed blower with easy-to-use rocker controls



Bright, 1-level heat-resistant LED modules enhance your cooking experience



Dishwasher-safe aluminum mesh filters feature quick-release latch for easy removal

Stainless
21"

PM300SS

SPECIFICATIONS

Width	MAX Blower CFM*	Sones†	Volts	Amps	Duct
21"	300	3.0	120	2.3	7" RD

OPTIONAL ACCESSORIES

Power Cord Kit	Non-Duct Kit	Stainless Steel Liners	Make-Up Air Damper	Damper	ADA Adapter Kit	Replacement Filter	Ductless Charcoal Filter
HCK44**	HARKPM21	LB30SS LB36SS	MD6TU, MD8TU, MD10TU	BP87Q	HAWSK3	S99100628-121	S99010464

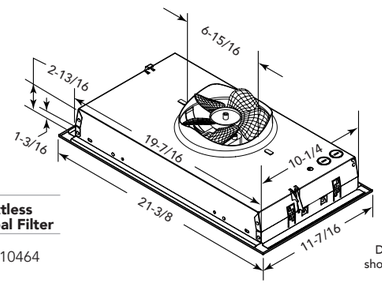

Dimensions shown in inches

2100 HVI CERTIFIED | TITLE 24 | ADA COMPLIANT | EZ1 ONE-PERSON INSTALLATION | UL CERTIFIED

* MAX Blower CFM indicates hood blower performance in open air. Find HVI rated performance for this model in the product specifications sheet at **Broan-NuTone.com**

† Sones at normal (or working) speed.

** Available in US only

BBN Series

BBN3 Series

650 MAX Blower CFM | 0.5 Sones at first speed





4-speed blower with backlit soft touch buttons for precise control



Bright, 2-level LED modules enhance your cooking experience

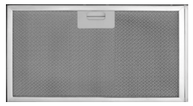

Dishwasher-safe aluminum micro mesh filters feature quick-release latch for easy removal

Stainless
30"

BBN3306SSC

SPECIFICATIONS

Width	MAX Blower CFM*	Sones†	Volts	Amps	Duct
30"	650	0.5	120	4.0	3.25x10" 6" RD, 8" RD

OPTIONAL ACCESSORIES

Power Cord Kit	Non-Duct Kit	Fillers (set of 7)	Hybrid Baffle Filters	ADA Adapter Kit	Replacement Filter	Ductless Charcoal Filter
HCK44**	HARKBN30	HADTBN30	HPFBN30	HAWRK5	S99010400-130	S99010464-130

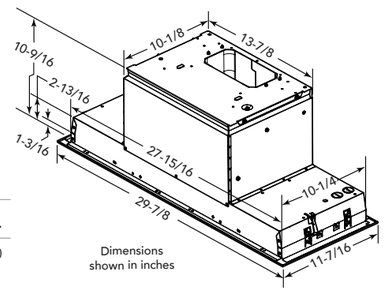

Dimensions shown in inches

CODE READY TECHNOLOGY | 2100 HVI CERTIFIED | TITLE 24 | ADA COMPLIANT | EZ1 ONE-PERSON INSTALLATION | UL CERTIFIED

* MAX Blower CFM indicates hood blower performance in open air. Find HVI rated performance for this model in the product specifications sheet at **Broan-NuTone.com**

† Sones at normal (or working) speed.

** Available in US only

BBN Series (continued)



BBN2 Series

350 MAX Blower CFM | 1.0 Sone at first speed





3-speed blower with push button control for easy operation



Bright, 1-level heat-resistant LED modules enhance your cooking experience

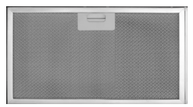

Dishwasher-safe aluminum mesh filters feature quick-release latch for easy removal

Stainless
24" • 30"

BBN2243SS
BBN2303SS

SPECIFICATIONS

Width	MAX Blower CFM*	Sones†	Volts	Amps	Duct
24" 30"	350	1.0	120	2.3	3.25x10" 6" RD

OPTIONAL ACCESSORIES

Power Cord Kit	Non-Duct Kit	Fillers (set of 7)	Hybrid Baffle Filters	Replacement Filter	Ductless Charcoal Filter
HCK44**	HARKBN24 (24") HARKBN30 (30")	HADTBN24 (24") HADTBN30 (30")	HPFBN24 (24") HPFBN30 (30")	S99010400-124 (24") S99010400-130 (30")	S99010464-124 (24") S99010464-130 (30")

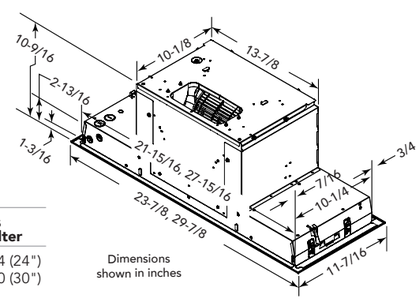

Dimensions shown in inches

* MAX Blower CFM indicates hood blower performance in open air. Find HVI rated performance for this model in the product specifications sheet at **Broan-NuTone.com**

† Sones at normal (or working) speed.

** Available in US only

BBN1 Series

300 MAX Blower CFM | 3.0 Sones at first speed





2-speed blower with easy-to-use rocker controls



Bright, 1-level heat-resistant LED modules enhance your cooking experience



Dishwasher-safe aluminum mesh filters feature quick-release latch for easy removal

Stainless
24" • 30"

BBN1243SS
BBN1303SS

SPECIFICATIONS

Width	MAX Blower CFM*	Sones†	Volts	Amps	Duct
24" 30"	300	3.0	120	2.3	7" RD

OPTIONAL ACCESSORIES

Power Cord Kit	Non-Duct Kit	Fillers (set of 7)	Make-Up Air Damper	Damper	ADA Adapter Kit	Replacement Filter	Ductless Charcoal Filter
HCK44**	HARKBN24 (24") HARKBN30 (30")	HADTBN24 (24") HADTBN30 (30")	MD6TU, MD8TU, MD10TU	BP87Q	HAWSK3	S99100628-124 (24") S99100628-130 (30")	S99010464-124 (24") S99010464-130 (30")

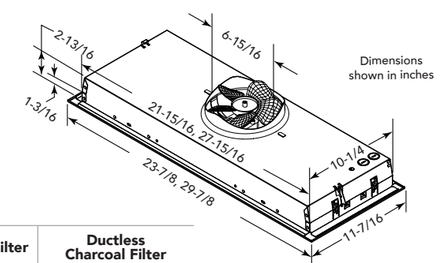

Dimensions shown in inches

* MAX Blower CFM indicates hood blower performance in open air. Find HVI rated performance for this model in the product specifications sheet at **Broan-NuTone.com**

† Sones at normal (or working) speed.

** Available in US only

Downdraft

For a powerful range hood that is there when you need it and hidden when you don't, downdraft hoods are the perfect solution.

27000 Series

600 MAX Blower CFM | 3.0 Sones at first speed





Space-saving design lets you make the most of precious, under-counter cabinet space



Infinitely adjustable speed control is flush with the side of the unit



Blower discharges right, left or down and slides side-to-side to ease installation



Washable aluminum grease filters



Stainless 30" • 36" | 273003 273603

SPECIFICATIONS

Width	MAX Blower CFM*	Sones†	Volts	Amps	Duct
30" 36"	600	3.0	120	4.0	3.25x10"

OPTIONAL ACCESSORIES

Black Cover	Replacement Filter
273023C	97009786

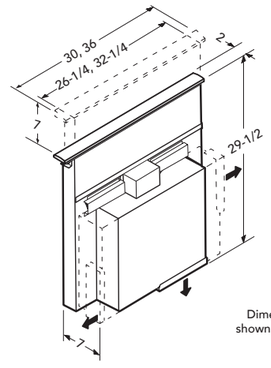

Dimensions shown in inches

* MAX Blower CFM indicates hood blower performance in open air. Find HVI rated performance for this model in the product specifications sheet at **Broan-NuTone.com**

† Sones at normal (or working) speed.

Make-Up Air Dampers

MD6TU / MD8TU / MD10TU



Broan-NuTone automatic make-up air dampers are the first to provide synchronized operations for kitchen, bath and whole-house ventilation products. With simple installation and intelligent design options, they strike the perfect balance to keep you and your home breathing easy.

- Economical, ruggedly constructed galvanized motorized damper
- Can be controlled by more than one Broan ventilation product
- Opens and closes automatically, preventing excess air from entering the home during heating and cooling operation and reducing energy consumption

Universal design

- Works with any Broan range hood over 300 CFM
- Provides interlocked make-up air
- No direct wire connection required
- Requires use of Broan fresh air inlets

Fresh air inlets (required)

Damper Model	Diameter	Fresh Air Inlet Model
MD6TU	6"	641FA
MD8TU	8"	643FA
MD10TU	10"	610FA

MD6TU/8TU/10TU installation

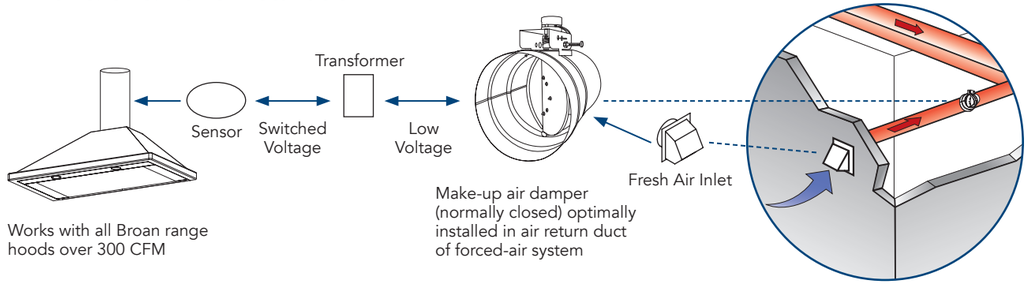

Works with all Broan range hoods over 300 CFM

Make-up air damper (normally closed) optimally installed in air return duct of forced-air system

Ducting Installation Accessories

	Stock No.	Description
	35	Wall hanging kit – for mounting hoods to wall when not hung from overhead cabinets. Designed for use with 46000, 43000, 42000, 41000, F40000, 40000 series.
AC Cord Kit	HCK44	HCK44 (10-pack) electric cord connections kit.
	634 644	Paintable roof cap with backdraft damper and bird screen; 3-1/4" x 10" or up to 8" round duct. Black finish. Aluminum roof cap with backdraft damper and bird screen; 3-1/4" x 10" or up to 8" round duct. Black finish.
	437	High-capacity roof cap – up to 1200 CFM exhaust with spring-loaded damper and bird screen.
	611 612	Aluminum roof cap for flat roofs, 8" round duct. Aluminum roof cap for flat roofs, 10" round duct.
	639 WC638 649	Paintable wall cap with backdraft damper and bird screen; 3-1/4" x 10" duct. Black finish. Paintable wall cap with backdraft damper and bird screen; 3-1/4" x 14" duct. Black finish. Paintable wall cap with backdraft damper and bird screen; 3-1/4" x 10" duct. Natural finish.
	641 641FA 647	Aluminum wall cap for 6" round duct, with backdraft damper and bird screen. Aluminum fresh air inlet wall cap for 6" round duct. Aluminum wall cap or 7" round duct, with damper and bird screen.
	610FA 643 643FA	10" aluminum fresh air inlet. Aluminum wall cap; 8" round duct with damper. Aluminum fresh air inlet wall cap for 8" round duct.
	441	Wall cap with gravity damper; 13-1/8" sq. fits 10" round duct.
	BP87Q	7" round discharge damper with sound dampening.
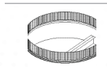	97 438	7" spring-loaded, in-line damper. 8" round section with in-line damper.
	421	10" vertical discharge in-line damper.

	Stock No.	Description
	411 412H T460 413 459 T461	3-1/4" x 10" to 6" round transition. 3-1/4" x 10" to 7" round transition. 3-1/4" x 14" to 7" round transition. 3-1/4" x 10" to 8" round transition. 3-1/4" x 14" to 8" round transition. 3-1/4" x 14" to 3-1/4" x 10" transition.
	414	8" to 10" expander.
	889	3-1/4" x 10" duct; 2' section.
	406 407 408 410	6" round duct; 2' section. 7" round duct; 2' section. 8" round duct; 2' section. 10" round duct; 2' section.
	428	3-1/4" x 10" vertical elbow.
	429	3-1/4" x 10" horizontal elbow.
	430 431	Short eave elbow for 3-1/4" x 10" duct with backdraft damper and grill. Long eave elbow for 3-1/4" x 10" duct with backdraft damper and grill.
	419 415 432 418	6" adjustable elbow (individual). 7" adjustable elbow (carton of four). 8" adjustable elbow (individual). 10" adjustable elbow (individual).
	MD6S MD8S MD10S MD6TU MD8TU MD10TU	6" Slave make-up air damper. 8" Slave make-up air damper. 10" Slave make-up air damper. 6" Universal make-up air damper. 8" Universal make-up air damper. 10" Universal make-up air damper.

Under-Cabinet





	SERIES	ALT4	ALT3	ALT2
	Page #	8	9	10
Specifications	Width & Dimensions	30" 20.0625" x 29.9375" x 5.125"	30" 20.0625" x 29.9375" x 5.125"	30" 20.0625" x 29.9375" x 5.125"
	Colors (may not be available in all widths)	SS	SS WW	SS BL
	MAX Blower CFM	640	490	350
	Sones^	0.8	1.1	1.5
	Controls	3-Speed Infrared	3-Speed Infrared	3-Speed Tap Touch
	LED Lighting	●	●	●
	CCT			
	Filter Type	Hybrid Baffle	Hybrid Baffle	Micro Mesh
	Duct Size	3.25x10" (H-V) / 3.25x14" (H-V) 7" Round	3.25x10" (H-V) 7" Round	3.25x10" (H-V) 7" Round
	Damper Included	●	●	●
	Ductless Charcoal Filter	HPF30	HPF30	HPF30
	Replacement Grease Filter	S97020204-002	S97020204-002	HPFAMM30
Features	One-Person Install	EZ1	EZ1	EZ1
	Auto Sensing	SmartSense®	SmartSense®	
	Code Ready Technology® (CRT)	CRT	CRT	
	Other Features	ADA, HVI CERTIFIED, ETL	ADA, HVI CERTIFIED, ETL	ADA, HVI CERTIFIED, ETL
	Energy Star			
	Title 24	TITLE 24	TITLE 24	TITLE 24
	Warranty	1-Year / 3-Year (LED module)	1-Year / 3-Year (LED module)	1-Year / 3-Year (LED module)
Options	Optional Accessories			
	ADA Adapter Kit	HAWRK5	HAWRK5	HAWRK5
	Power Cord Kit	HCK44*	HCK44*	HCK44*
	7" Round Damper	BP87Q	BP87Q	BP87Q
	Make-Up Air Damper	MD6TU, MD8TU, MD10TU	MD6TU, MD8TU, MD10TU	MD6TU, MD8TU, MD10TU

*** US Only** **** CAN Only** **^ Working Speed**

Under-Cabinet





	SERIES	ALT1	MTR3	MTR2
	Page #	11	12	13
Specifications	Width & Dimensions	30" 20.0625" x 29.9375" x 5.125"	30" 20.0625" x 29.9375" x 5.125"	30" / 36" 20.0625" x W x 5.125" (refer to drawings for full dimensions)
	Colors (may not be available in all widths)	SS WW	SS	SS WW
	MAX Blower CFM	350	490	350
	Sones^	1.5	1.1	1.5
	Controls	2-Speed Rocker	3-Speed Infrared	3-Speed Tap Touch
	LED Lighting	●	●	●
	CCT			
	Filter Type	Micro Mesh	Hybrid Baffle	Micro Mesh
	Duct Size	3.25x10" (H-V) 7" Round	3.25x10" (H-V) 7" Round	3.25x10" (H-V) 7" Round
	Damper Included	●	●	●
	Ductless Charcoal Filter	HPF30	HPF30	30" - HPF30 36" - S97020467
	Replacement Grease Filter	HPFAMM30	S97020204-002	30" - HPFAMM30 36" - S99010434-003
Features	One-Person Install	EZ1	EZ1	EZ1
	Auto Sensing		SmartSense®	
	Code Ready Technology® (CRT)		CRT	
	Other Features	ADA HVI CERTIFIED ETL	ADA HVI CERTIFIED ETL	ADA HVI CERTIFIED ETL
	Energy Star			
	Title 24	TITLE 24	TITLE 24	TITLE 24
	Warranty	1-Year / 3-Year (LED module)	1-Year / 3-Year (LED module)	1-Year / 3-Year (LED module)
Options	Optional Accessories			
	ADA Adapter Kit	HAWSK3	HAWRK5	HAWRK5
	Power Cord Kit	HCK44*	HCK44*	HCK44*
	7" Round Damper	BP87Q	BP87Q	BP87Q
	Make-Up Air Damper	MD6TU, MD8TU, MD10TU	MD6TU, MD8TU, MD10TU	MD6TU, MD8TU, MD10TU

* US Only ** CAN Only ^ Working Speed

Under-Cabinet





	SERIES	MTR1	GLA3	GLA2
	Page #	14	15	16
Specifications	Width & Dimensions	30" / 36" 20.0625" x W x 5.125" (refer to drawings for full dimensions)	30" / 36" 19.6875" x W x 6" (refer to drawings for full dimensions)	30" / 36" 19.6875" x W x 6" (refer to drawings for full dimensions)
	Colors (may not be available in all widths)	SS BLS BL WW	SS WW	SS BLS WW
	MAX Blower CFM	350	490	350
	Sones^	1.5	1.1	1.5
	Controls	2-Speed Rocker	3-Speed Infrared	3-Speed Tap Touch
	LED Lighting	●	●	●
	CCT			
	Filter Type	Micro Mesh	Hybrid Baffle	Micro Mesh
	Duct Size	3.25x10" (H-V) 7" Round	3.25x10" (H-V) 7" Round	3.25x10" (H-V) 7" Round
	Damper Included	●	●	●
	Ductless Charcoal Filter	30" - HPF30 36" - S97020467	30" - HPF30 36" - HPF36	30" - HPF30 36" - S97020467
	Replacement Grease Filter	30" - HPFAMM30 36" - S99010434-003	30" - S97020204-002 36" - S97020204-003	30" - HPFAMM30 36" - S99010434-003
Features	One-Person Install	EZ1	EZ1	EZ1
	Auto Sensing		SmartSense®	
	Code Ready Technology® (CRT)		CRT	
	Other Features	ADA HVI CERTIFIED ETL	ADA HVI CERTIFIED ETL	ADA HVI CERTIFIED ETL
	Energy Star			
	Title 24	TITLE 24	TITLE 24	TITLE 24
	Warranty	1-Year / 3-Year (LED module)	1-Year / 3-Year (LED module)	1-Year / 3-Year (LED module)
Options	Optional Accessories			
	ADA Adapter Kit	HAWSK3	HAWRK5	HAWRK5
	Power Cord Kit	HCK44*	HCK44*	HCK44*
	7" Round Damper	BP87Q	BP87Q	BP87Q
	Make-Up Air Damper	MD6TU, MD8TU, MD10TU	MD6TU, MD8TU, MD10TU	MD6TU, MD8TU, MD10TU

* US Only ** CAN Only ^ Working Speed

Under-Cabinet





	SERIES	GLA1	BXT1	F40000*
	Page #	17	18	19
Specifications	Width & Dimensions	24" / 30" / 36" / 42" 19.6875" x W x 6" (refer to drawings for full dimensions)	30" 18" x 29.875" x 6"	24" / 30" / 36" 17.5" x W x 6" (refer to drawings for full dimensions)
	Colors (may not be available in all widths)	SS BL WW	SS BL WW	SF BL WW
	MAX Blower CFM	350	270	230
	Sones^	1.5	2.0	3.5
	Controls	2-Speed Rocker	2-Speed Rocker	2-Speed Rocker
	LED Lighting	●	●	●
	CCT			
	Filter Type	Micro Mesh	Aluminum Mesh	Aluminum Mesh
	Duct Size	3.25x10" (H-V) 7" Round	3¼" x 10" (H-V) 7" Round	3.25x10" (H-V) 7" Round
	Damper Included	●		
	Ductless Charcoal Filter	24" - S97020465 30" - HPF30 36" - S97020467 42" - S97020468	HPFX1	41F
	Replacement Grease Filter	24" - S99010434-001 30" - HPFAMM30 36" - S99010434-003 42" - S99010434-004	S99010467	BP29
Features	One-Person Install	EZ1		
	Auto Sensing			
	Code Ready Technology® (CRT)			
	Other Features	ADA HVI ETL	ADA HVI UL	PrintGuard† ADA HVI UL
	Energy Star			
	Title 24			
	Warranty	1-Year / 3-Year (LED module)	1-Year	1-Year
Options	Optional Accessories			
	ADA Adapter Kit	HAWSK3	HAWSK3	HAWSK3
	Power Cord Kit	HCK44*	HCK44*	HCK44*
	7" Round Damper	BP87Q	BP87Q	BP87Q
	7" Round Adapter Plate			SR680508
	Make-Up Air Damper	MD6TU, MD8TU, MD10TU		
	Round Duct Transition		411	411

* US Only ** CAN Only ^ Working Speed † On stainless finish models only

Under-Cabinet





	SERIES	BU2**	NU2**	41000*
	Page #	20	21	22
Specifications	Width & Dimensions	24" / 30" 17.5" x W x 6" (refer to drawings for full dimensions)	24" / 30" 17.5" x W x 6" (refer to drawings for full dimensions)	21" / 24" / 30" / 36" 17.5" x W x 6" (refer to drawings for full dimensions)
	Colors (may not be available in all widths)	SF BL WW WH	SF BL WW	SF BL WW
	MAX Blower CFM	230	230	
	Sones^	3.5	3.5	
	Controls	2-Speed Rocker	2-Speed Rocker	2-Speed Rocker
	LED Lighting	●	●	●
	CCT			
	Filter Type	Aluminum	Aluminum	Charcoal
	Duct Size	3.25x10" (H-V) 7" Round	3¼" x 10" (H-V) 7" Round	Ductless
	Damper Included			
	Ductless Charcoal Filter	41F	41F	41F
	Replacement Grease Filter	BP29	BP29	
Features	One-Person Install			
	Auto Sensing			
	Code Ready Technology® (CRT)			
	Other Features	PrintGuard† ADA HVI UL	PrintGuard† ADA HVI UL	PrintGuard† ADA UL
	Energy Star			
	Title 24			
	Warranty	1-Year	1-Year	1-Year
Options	Optional Accessories			
	ADA Adapter Kit	HAWSK	HAWSK3	HAWSK3
	Power Cord Kit	HCK44*	HCK44*	HCK44*
	7" Round Damper	BP87Q	BP87Q	
	7" Round Adapter Plate	SR680508	SR680508	
	Round Duct Transition	411	411	

* US Only ** CAN Only ^ Working Speed † On stainless finish models only

Chimney





	SERIES	WPR3	BW5030SSL*	BWP1
	Page #	26	27	28
Specifications	Width & Dimensions	30" / 36" 17.75" x W x 23" (refer to drawings for full dimensions)	30" 19.75" x 29.5" x 25.5"	24" / 30" / 36" 19.6875" x W x 25.375" (refer to drawings for full dimensions)
	Colors (may not be available in all widths)	SS	SS	SS
	MAX Blower CFM	300	380	450
	Sones^	1.0	1.5	3.0
	Controls	2-Speed Rocker	3-Speed Push Button	3-Speed Soft Touch
	LED Lighting	●	●	●
	CCT	CCT SELECTABLE LED LIGHTING		
	Filter Type	Micro Mesh	Aluminum	Micro Mesh
	Duct Size	6" Round	6" Round	6" Round
	Damper Included			
	Ductless Charcoal Filter	WPRCF	ROUNDFILTER	FILTERBWPTS
	Replacement Grease Filter	30" - S1119571 36" - S1119572	S97018027	24" - S99010489 30" - S97018027 36" - S97018028
Features	Flue Height	8'-9'	8'-9'	8'-9'
	One-Person Install	ONE PERSON INSTALL		
	Auto Sensing			
	Code Ready Technology® (CRT)			
	Other Features	ADA COMPLIANCE, HVI CERTIFIED, ETL US	HVI CERTIFIED, UL CERTIFIED	HVI CERTIFIED, ETL US
	Energy Star	ENERGY STAR		
	Title 24	TITLE 24		
	Warranty	1-Year	1-Year	1-Year
Options	Optional Accessories			
	ADA Adapter Kit	HAWSK3		
	10' Flue Extension	FXN58SS	FXN58SS	FXN58SS
	Non-Duct Kit	WPRRCK	RK58	ARKBWP
	Non-Duct Filters	WPRCF		
	Airflow Reducer (<300 CFM)			ARP6

* US Only ** CAN Only ^ Working Speed

Chimney





	SERIES	BWS1	BWT1	EW43
	Page #	29	30	31
Specifications	Width & Dimensions	30" 19.6875" x 29.5" x 23.75"	30" 19.75" x 29.5" x 22.0625"	30" / 36" 19.6875" x W x 23.8125" (refer to drawings for full dimensions)
	Colors (may not be available in all widths)	SS BLS	SS SSB	SS
	MAX Blower CFM	450	450	460
	Sones^	3.0	3.0	1.5
	Controls	3-Speed Soft Touch	3-Speed Soft Touch	3-Speed Tap Touch
	LED Lighting	●	●	●
	CCT			
	Filter Type	Micro Mesh	Micro Mesh	Aluminum
	Duct Size	6" Round	6" Round	6" Round
	Damper Included			●
	Ductless Charcoal Filter	FILTERBWPTS	FILTERBWPTS	30" - S99010473 36" - S99010474
	Replacement Grease Filter	S97018027	S97018027	30" - S99010476 36" - S99010477
Features	Flue Height	8'-9'	8'-9'	8'-9'
	One-Person Install			
	Auto Sensing			
	Code Ready Technology® (CRT)			CRT
	Other Features	HVI CERTIFIED, ETL US	HVI CERTIFIED, ETL US	HVI CERTIFIED, UL CERTIFIED
	Energy Star			
	Title 24			TITLE 24
	Warranty	1-Year	1-Year	1-Year
Options	Optional Accessories			
	10' Flue Extension	AEBWS (stainless) AEBWBLS (black stainless)	FXN58SS	AEEW43SS
	Non-Duct Kit	ARKBWS	ARKBWT	ARKEW43
	Airflow Reducer (<300 CFM)	ARP6	ARP6	

* US Only ** CAN Only ^ Working Speed

Chimney





	SERIES	EW48	EW46	EWP1*
	Page #	32	33	34
Specifications	Width & Dimensions	30" / 36" 19.75" x W x 27.625" (refer to drawings for full dimensions)	30" 19.75" x 29.875" x 22.75"	30" / 36" 19.6875" x W x 27.5625" (refer to drawings for full dimensions)
	Colors (may not be available in all widths)	SS BLS	SS	SS
	MAX Blower CFM	460	460	640
	Sones^	1.5	1.5	<0.3
	Controls	3-Speed Tap Touch	3-Speed Tap Touch	4-Speed Soft Touch
	LED Lighting	●	●	●
	CCT			
	Filter Type	Aluminum	Aluminum	Hybrid Baffle
	Duct Size	6" Round	6" Round	6" Round
	Damper Included	●	●	
	Ductless Charcoal Filter	30" - S99010473 36" - S99010474	S99010475	S99010494
	Replacement Grease Filter	30" - S99010476 36" - S99010477	S99010478	30" - S97010487 36" - S97010488
Features	Flue Height	8'-9'	8'-9'	8'-9'
	One-Person Install			
	Auto Sensing			
	Code Ready Technology® (CRT)	CRT	CRT	CRT
	Other Features	HVI CERTIFIED, UL CERTIFIED	HVI CERTIFIED, UL CERTIFIED	HVI CERTIFIED, ETL US
	Energy Star			
	Title 24	TITLE 24	TITLE 24	TITLE 24
	Warranty	1-Year	1-Year	1-Year
Options	Optional Accessories			
	9'-10' Flue Extension	AEEW48SS		
	10' Flue Extension		AEEW46SS	FXN58SS
	Non-Duct Kit	ARKEW48	ARKEW46	ARKBWP

* US Only ** CAN Only ^ Working Speed

Chimney / Island / Downdraft





	SERIES	EWS1	EIT136SS	27000
	Page #	35	36	46
Specifications	Width & Dimensions	30" / 36" 20" x W x 27" (refer to drawings for full dimensions)	36" 23.625" x 35.4375" x 37.375"	30" / 36" 29.5" x W x 7" (refer to drawings for full dimensions)
	Colors (may not be available in all widths)	SS	SS	SS
	MAX Blower CFM	650	640	600
	Sones^	1.4	<0.3	3.0
	Controls	2-Speed Rocker	4-Speed Soft Touch	Infinite Speed Rotary
	LED Lighting	●	●	
	CCT			
	Filter Type	Micro Mesh	Baffle	Aluminum
	Duct Size	6" Round	6" Round	3.25x10"
	Damper Included			
	Ductless Charcoal Filter	SV22759	S99527023	
	Replacement Grease Filter	S113821	S1108684	97009786
Features	Flue Height	8'-9'	8'-9'	
	One-Person Install			
	Auto Sensing			
	Code Ready Technology® (CRT)	CRT	CRT	
	Other Features	HVI CERTIFIED, UL CERTIFIED	HVI CERTIFIED, ETL US	HVI CERTIFIED, UL CERTIFIED
	Energy Star			
	Title 24		TITLE 24	TITLE 24
	Warranty	1-Year Limited	1-Year	1-Year
Options	Optional Accessories			
	ADA Adapter Kit	HAWSK3		
	9-11' Flue Extension	AEWCST1SS		
	10' Flue Extension		FXNEIT1SS	
	Non-Duct Kit	ANKWCPST1	ANKIBF4	
	Make-Up Air Damper	MD6TU, MD8TU, MD10TU		
	Black Cover			273023C
	Remote Control		HCR4	

* US Only ** CAN Only ^ Working Speed